Dimming Driver Installation instructions

Driver Model	DC input to DRIVER ONLY	Use with Panel type	Drivers required QTY	Output mA	Output Volts	Mark	CLASS	Max operating temp.
PCS010-035-1	100VAC ~277VAC	FP3030W010-1	1	350mA	24VDC ~28VDC	SELV	2	50^{0}C
		FP3030N010-1	1					
		FP3030C010-1	1					
PCM020-060-1	100VAC ~277VAC	FP3060W020-1	1	600mA	24VDC ~36VDC	SELV	2	50^{0}C
		FP3060N020-1	1					
		FP3060C020-1	1					
PCS045-120-1	100VAC ~277VAC	FP6060W040-1	1	1200mA	24VDC ~36VDC	SELV	2	50^{0}C
		FP6060N040-1	1					
		FP6060C040-1	1					
		FP6060W045-1	1					
		FP6060N045-1	1					
		FP6060C045-1	1					
		FP3012W040-1	1					
		FP3012N040-1	1					
		FP3012C040-1	1					
		FP3012W045-1	1					
		FP3012N045-1	1					
		FP3012C045-1	1					
		FP6012W080-1	2					
		FP6012N080-1	2					
		FP6012C080-1	2					
PCS055-150-1	100VAC ~277VAC	FP6060W055-1	1	1500mA	24VDC ~36VDC	SELV	2	50^{0}C
		FP6060N055-1	1					
		FP6060C055-1	1					
		FP3012W055-1	1					
		FP3012N055-1	1					
		FP3012C055-1	1					

IP20 SELV

Turn off power supply for all stages of product installation

Do not connect Panel directly to mains supply. Always use the correct Optoma LED Driver

1. **Must be installed by a qualified electrician in accordance with the latest IEE, local regulations and codes.**
2. **It is the responsibility of the contractor, installer, purchaser and end user to ensure correct use in accordance with local regulations and law.**
3. **Ensure correct fasteners when mounting on ceiling or walls.**
4. **Do not cover with thermal insulation.**
5. **Dry use only**

Optoma Europe Ltd. 42 Caxton Way, Watford Business Park, Watford, Hertfordshire. WD188QZ
Tel: +44 (0) 1923 691800 Fax: +44 (0) 1923 691878. Lighting@optoma.co.uk
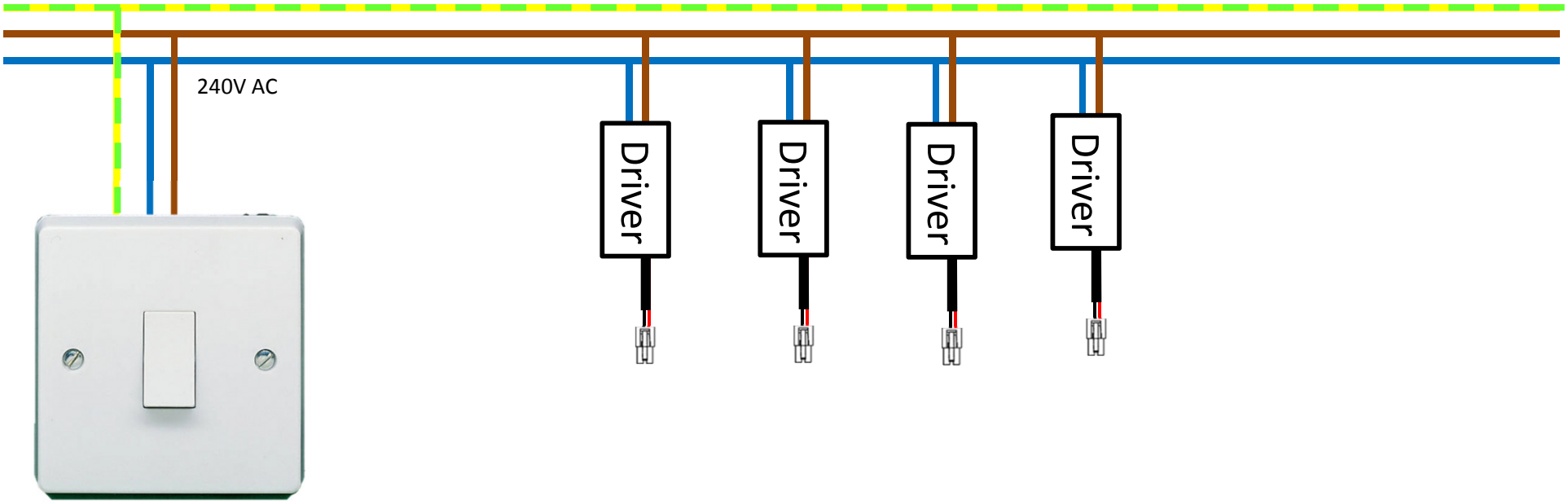
Installation instructions